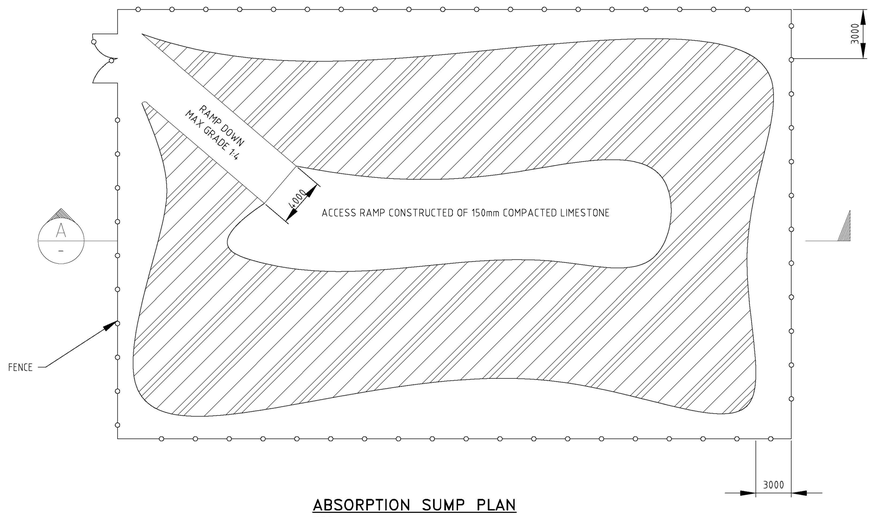

ABSORPTION SUMP PLAN
N.T.S

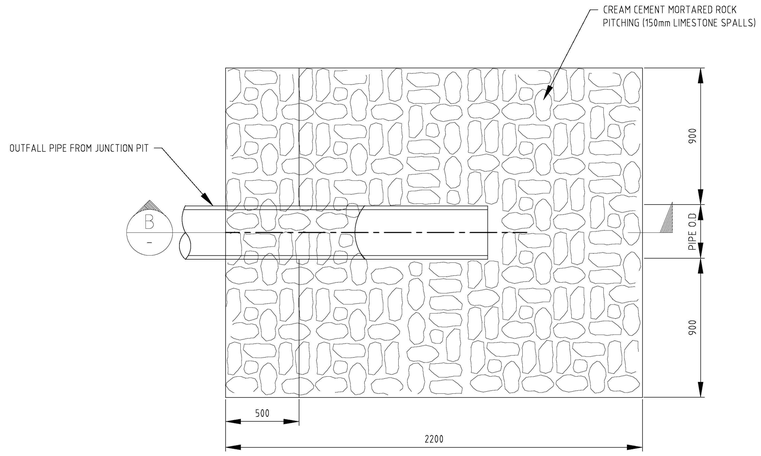

SUMP OUTFALL APRON PLAN
N.T.S

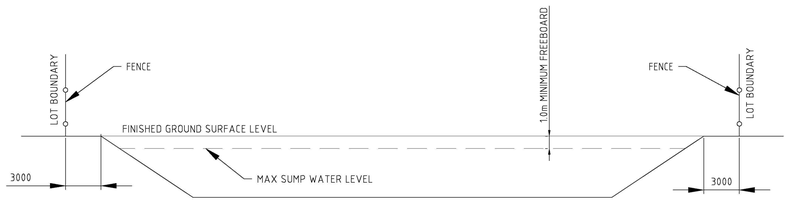

SECTION–A
N.T.S

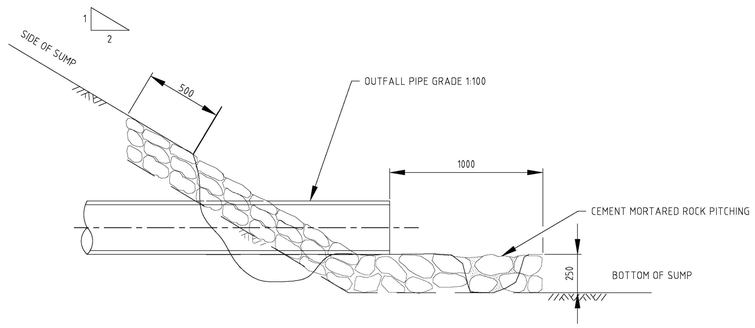

SECTION–B
N.T.S

NOTES:

1. DIMENSIONS ARE IN MILLIMETRES.
2. PLACE FENCE ON BOUNDARY
3. BANKS AND TOP OF EDGE TO BE GRASS SEADED FOR STABILISATION

REV	DATE	DESCRIPTION	DRAWN
E	06/19	SUPER SIX SHEETING REMOVED, REVIEW COMPLETED, DRAFTING AMENDMENTS MADE	J.M
D	06/18	SUPER SIX SHEETING DEPTH AMENDED FROM 900mm TO 600mm	J.M
C	05/17	DRAFTING AMENDMENTS MADE	J.M
B	09/12	CITY OF KWINANA LOGO ADDED	J.M
A	04/09	ADOPTED BY TOWN OF KWINANA	V.K

ASSOCIATE CONSULTANT:

City of Kwinana

PROJECT:
STANDARD DETAILS
DRAINAGE SUMP

PHONE: (08) 9439 0200
FAX: (08) 9439 0222
EMAIL: admin@kwinana.wa.gov.au
WEB: http://www.kwinana.wa.gov.au
ADDRESS: Cnr Gilmore Avenue and Sulphur Road, Kwinana WA 6167

SCALE: N.T.S (A1)
DESIGN: S.S
CHECK: R.N
DRAWN: J.M
DATE: 05/17
AUTHORISED (MANAGER ENGINEERING SERVICES): R.NAJAFZADEH

DRAWING TITLE: STANDARD DETAILS DRAINAGE SUMP
FILE NO. ENG03
DRAWING NUMBER: STD–D03
REVISION: E